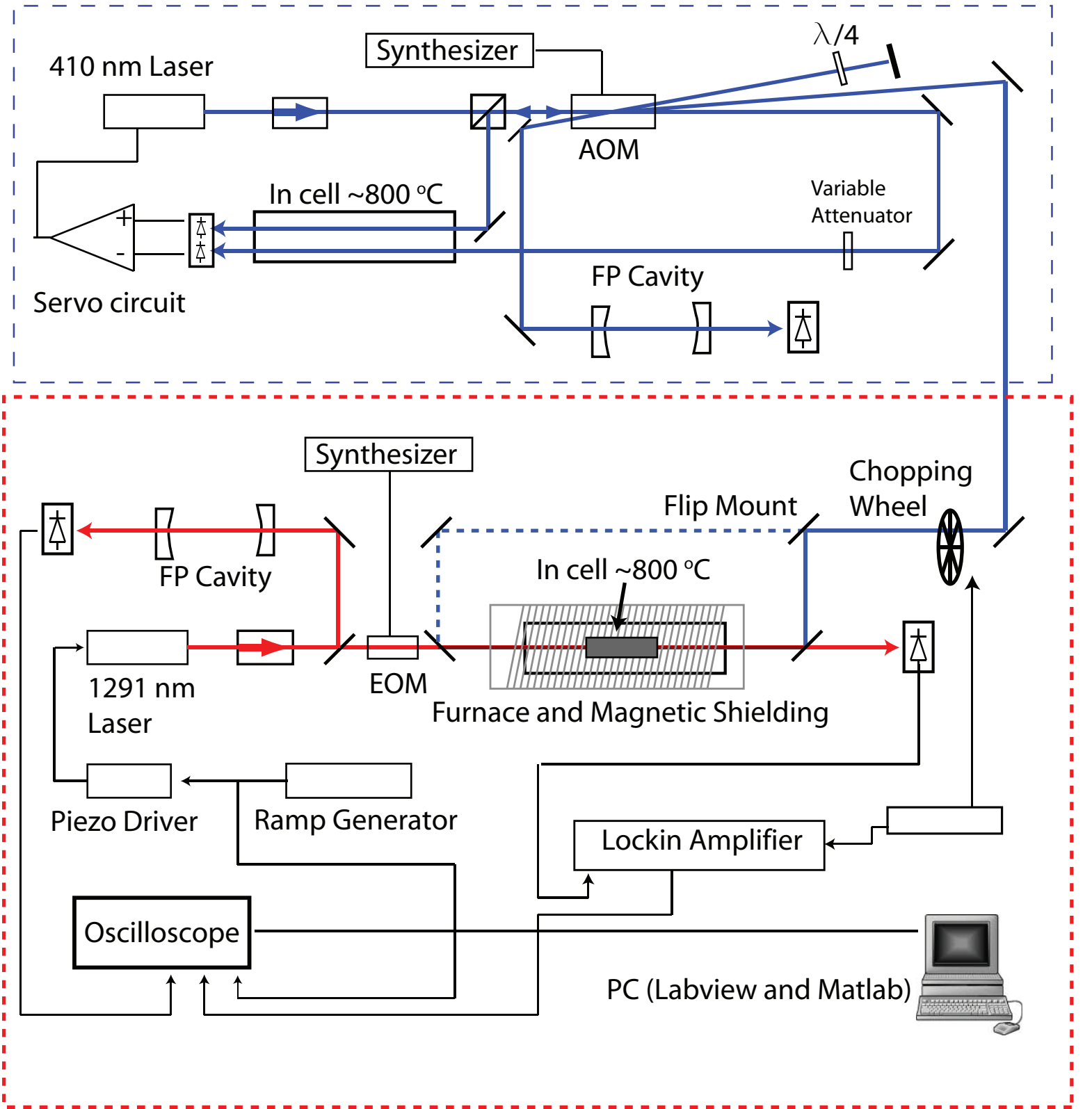
410 nm Laser
Synthesizer
λ/4
AOM
In cell ~800 °C
Variable
Attenuator
Servo circuit
FP Cavity
Synthesizer
Chopping
Wheel
Flip Mount
FP Cavity
In cell ~800 °C
1291 nm
Laser
EOM
Furnace and Magnetic Shielding
Piezo Driver
Ramp Generator
Lockin Amplifier
Oscilloscope
PC (Labview and Matlab)