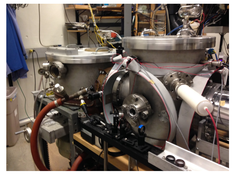

Precise Measurement of the $6P_{1/2}$ Polarizability in Atomic Indium

Allison L. Carter '16, Benjamin L. Augenbraun '15, Nathaniel B. Vilas '17, P. M. Rupasinghe, and P. K. Majumder

Department of Physics, Williams College, Williamstown, MA 01267

Work supported by NSF Grant 1404206

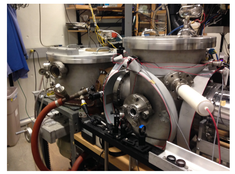

Background

General

- Laser spectroscopy to test accuracy, guide refinement of *ab initio* theory calculations for Group IIIA (ns^2np^1) atoms
- "Alkali-like" valence p electron; recent theory accurate to 2%
- Essential for tests of fundamental physics and symmetry violations in these systems (PNC, EDM, clocks)

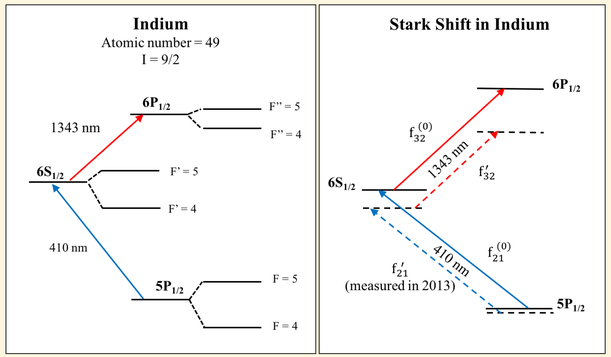

Stark Shift and Scalar Polarizability

- Measure quadratic shift with calibrated electric field: $\Delta E = k_s \mathcal{E}^2$
- Theoretical prediction of scalar polarizability α_0 depends on wavefunctions
- $6p$ polarizability dominated by $5d - 6p$ mixing: sensitive test of D-state wavefunction calculations
- 2013 measurement of $\alpha_0\,(6S_{1/2}{-}5P_{1/2}) = 1000(3)a_0^3$ in excellent agreement with theory

G. Ranjit *et al.*, Phys. Rev. A **87**, 032506 (2013).
M.S. Safranova *et al.*, Phys. Rev. A **87**, 032513 (2013).

Two-Tone FM Spectroscopy

- Motivated by very small ($< 10^{-3}$) optical depth in atomic beam
- Modulate IR laser beam at *two* frequencies: 600±0.05 MHz
- Demodulate at difference frequency (100 kHz)
- Characteristic three-peaked lineshape with 600 MHz sidebands
- Good S/N, zero background

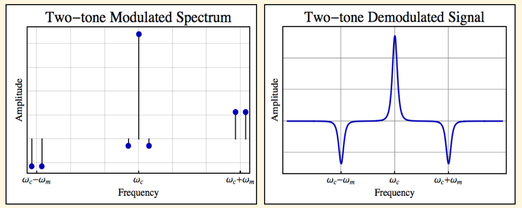

410 nm Laser Locking

- Complicated three-level system dynamics arise if 410 nm laser is not always on resonance
- Lock to atomic beam transition to ensure laser frequency shifts with electric field
- Use 100 MHz FM spectroscopy to obtain dispersive locking signal
- Locking correction signal follows quadratic Stark shift as expected

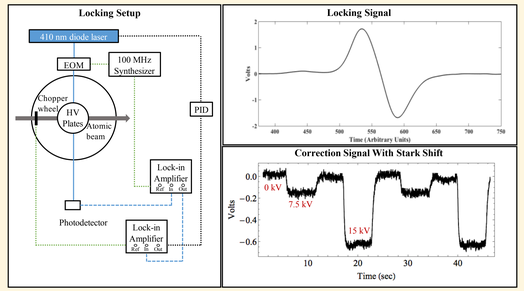

Data Analysis and Results

- Collect data in voltage off-on-on-off sequence
- ~3000 sets of HV-off and HV-on scans
- Use Fabry-Pérot signal for frequency axis linearization and vapor cell spectrum for calibration and referencing

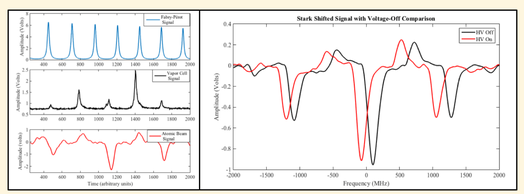

Shift Determination

- Fit to sum of Lorentzians
- Overlap of entire spectrum, minimize squared deviations (see figure)

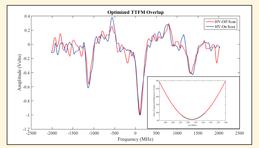

Results

- Plot of the measured Stark shift vs. E^2 from one day's data is linear
- $k_s = \frac{1}{2}(\alpha_0(6P_{1/2}) - \alpha_0(6S_{1/2}))$
- Achieve statistical precision of $\sim 1\%$ in one day

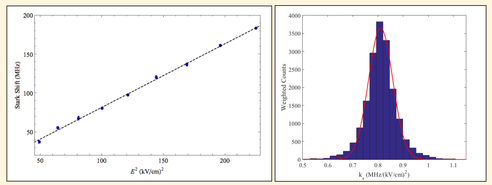

Vapor Cell Setup

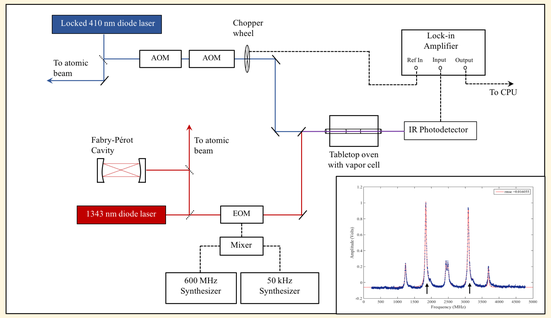

- Use heated vapor cell to monitor lasers and IR transition
- Modulated IR laser provides sidebands for calibration and electric field-free reference
- Arrows indicate hyperfine peaks; other peaks are sidebands from EOM

Systematic Error Tests and Results

- Comparison of data set split by laser scan direction, field on-off sequence, fit method, and hyperfine transition
- Three-level simulations show failure to stay locked at 410 nm first-step resonance results in systematic dependence of k_s on laser power and static field
- Data show no resolved correlation (see below)

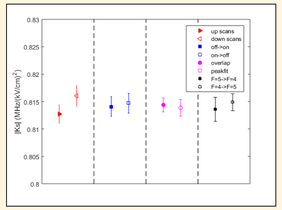

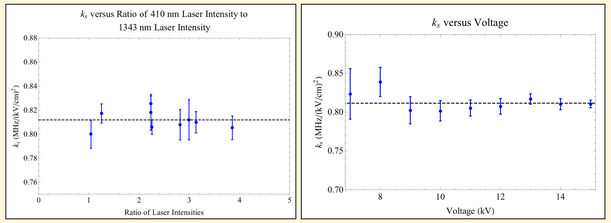

- Measure $k_s = .815(2)(\text{stat})(4)(\text{sys})$ MHz/(kV/cm)^2
- Using known $\alpha_0(6S_{1/2})$ measured in 2013, we infer $\alpha_0(6P_{1/2}) = 7700(40)a_0^3$
- This measurement is in good agreement with theoretical predictions

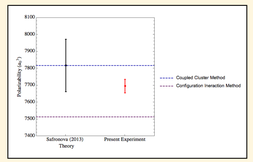

Atomic Beam Setup

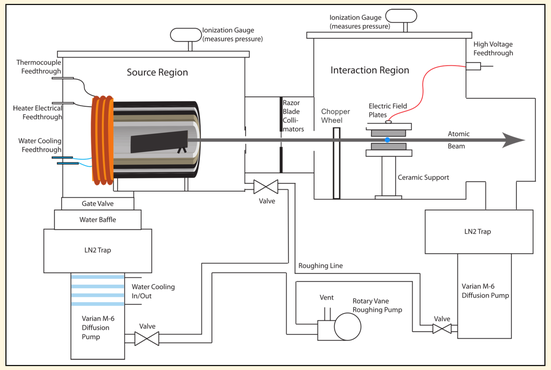

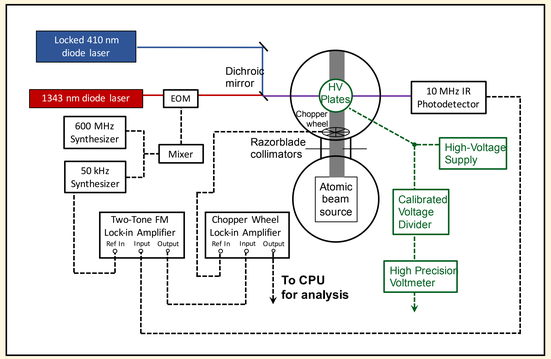

Observation of $6s_{1/2} \rightarrow 6p_{1/2}$ Transition

- Overlap blue and IR lasers through ABU, detect IR transmission
- Very low absorption ($\alpha \sim 10^{-3}$)
- Observe signal using two-tone frequency modulation scheme

Future Work

- Same experimental scheme and (tuned) IR laser allows measurement of indium $6P_{3/2}$ state polarizability
- $J = \frac{3}{2}$ implies both scalar (α_0) and tensor (α_2) polarizabilities
- $6P_{3/2}$ α_0, α_2 already calculated (Safronova 2013)